Product Specification and Submittal Form

Corporate Sales: 800-275-2279
Technical Support: 206-760-7100

SLOTTED STUD

MANUFACTURER

Steeler, Inc.
10023 Martin Luther King Jr. Way S.
Seattle, WA 98178
Phone: (206) 725-2500
Fax: (206) 725-1700

Steeler, Inc.
6851 Smith Ave.
Newark, CA 94560
Phone: (510) 505-9595
Fax: (510) 505-0200

DESCRIPTION

Steeler Slotted Stud is one component of the Steeler Slotted Stud Head-of-Wall Deflection System consisting of the addition of Steeler Deep Leg Track attached by screws penetrating the leg of the track and freely floating in the slot at the top of the Steeler Slotted Stud. The Steeler Slotted Stud has two 2-1/4" slots (one in each flange) at the head of the stud which allows for up to a full 2" vertical deflection. Since the deflection slot is in the stud rather than the track (such as conventional slotted track), the stud is secured at its actual location anywhere along the solid track.
Steeler Slotted Stud is available in web dimensions from 2-1/2" – 12" and in gauges from 30 mil – 68 mil thicknesses.

MATERIALS

Slotted Studs section is fabricated from **25 to 12 gauge** hot dipped galvanized steel conforming to ASTM A653 or equal.

RECOGNITION

Steeler ICC-ES Report ESR-2054.

CLASSIFICATION

- **California State Fire Marshal Listed**
- **UL Head of wall Systems:**
  HW-D-0016
  HW-D-0020
  HW-D-0021
  HW-D-0029
  HW-D-0032
  HW-D-0033
  HW-D-0034
  HW-D-0037
  HW-D-0048
  HW-D-0049
  U.L. Classified *XHLI.R21503*
  U.L. Classified for Canada *XHLI7.R21503*

ASTM & Code Standards

- AISI, North American Specification for the Design of Cold-Formed Steel Structural Members 2001 Edition with 2004 Supplement
- ASTM A370, Standard Test Methods and Definitions for Mechanical Testing of Steel Products
- ASTM A1003, Standard Specification for Sheet Steel, Carbon, Metallic and Non-Metallic Coating for Cold-Formed Framing Members.
- Steeler's structural framing comply with 2006 International Building Code (IBC– 2006)
- ASTM C955, Standard Specification for Structural Steel Framing Members.
- ASTM C754, Standard Specification for Installation of Steel Framing Members to Receive Screw-Attached Gypsum Panel Products.
- ASTM C1513, Standard Specification for Steel Tapping Screws for Cold-Formed Steel Framing Connections.
- ASTM C645, Standard Specification for Nonstructural Steel Framing Members.

COLOR CODE
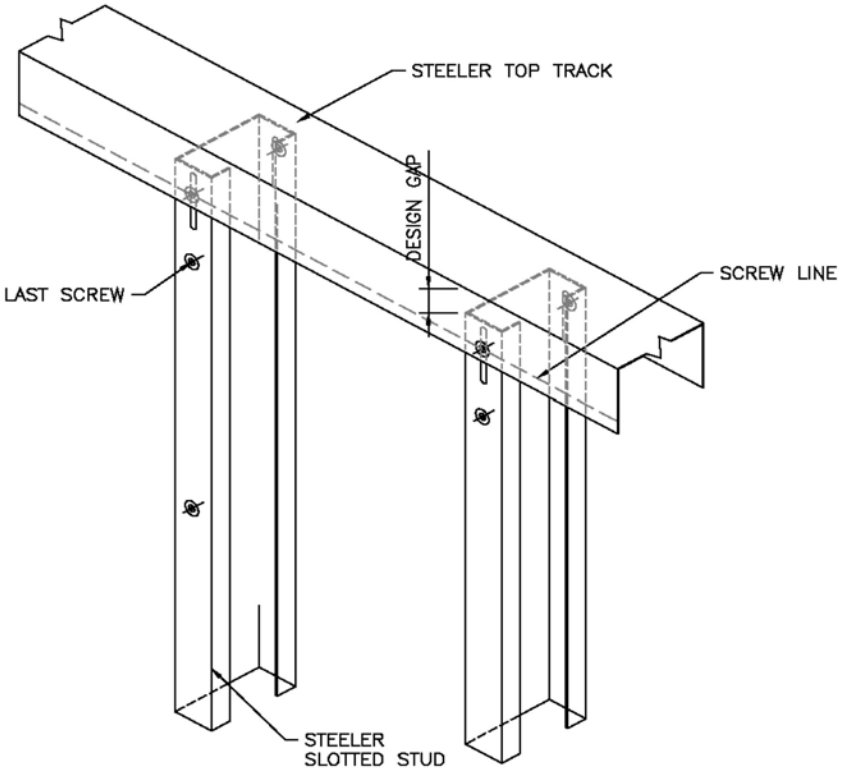
18 mil - Clear
24 mil - Brown
27 mil - Black
30 mil - Pink
33 mil - White
43 mil - Yellow
54 mil - Green
68 mil - Orange
97 mil - Red
Painted on ends.